PHILIPS

BG5020
BG3016
BG3015
BG3011
BG3010
BG3005

www.philips.com/support

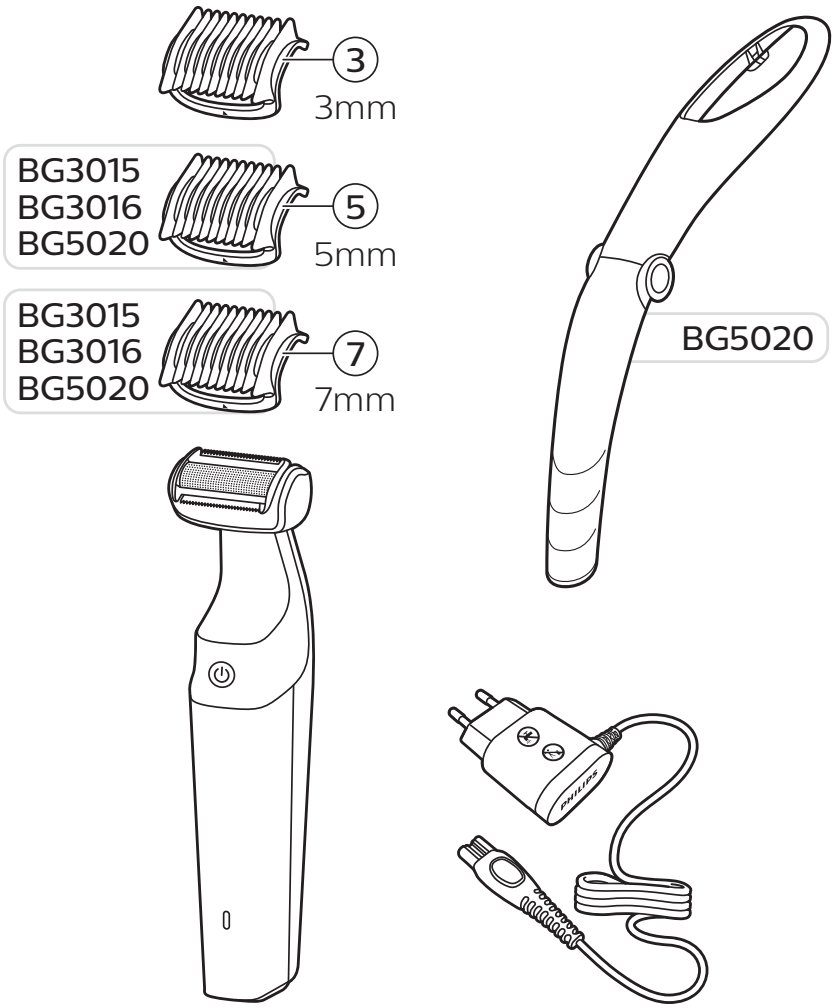
3
3mm
BG3015
BG3016
BG5020
5
5mm
BG3015
BG3016
BG5020
7
7mm
BG5020
PHILIPS

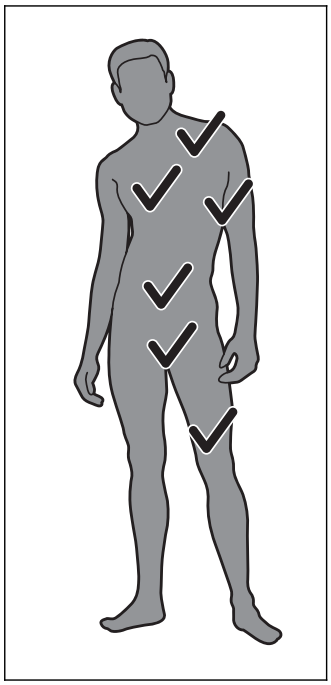

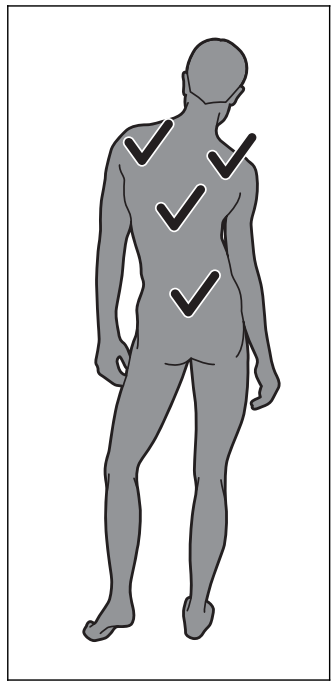

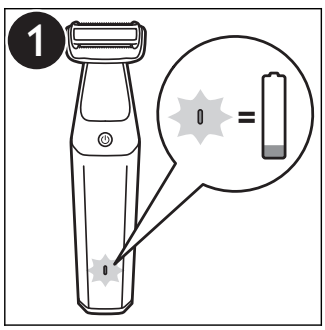
1
=

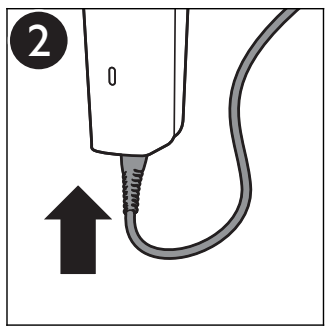
2

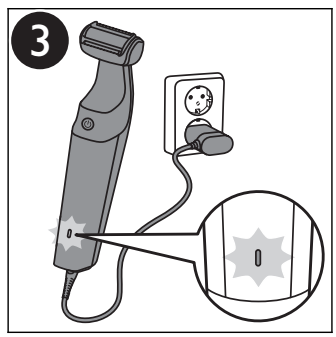
3

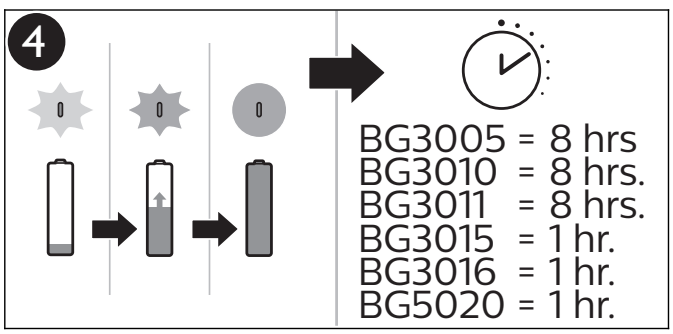
4
BG3005 = 8 hrs
BG3010 = 8 hrs.
BG3011 = 8 hrs.
BG3015 = 1 hr.
BG3016 = 1 hr.
BG5020 = 1 hr.

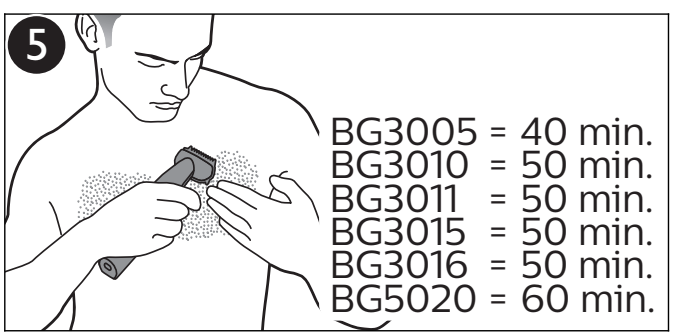
5
BG3005 = 40 min.
BG3010 = 50 min.
BG3011 = 50 min.
BG3015 = 50 min.
BG3016 = 50 min.
BG5020 = 60 min.

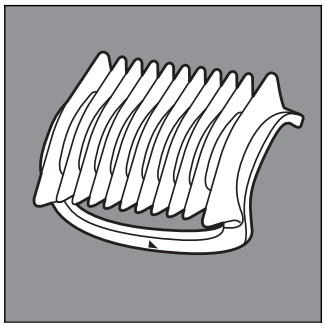

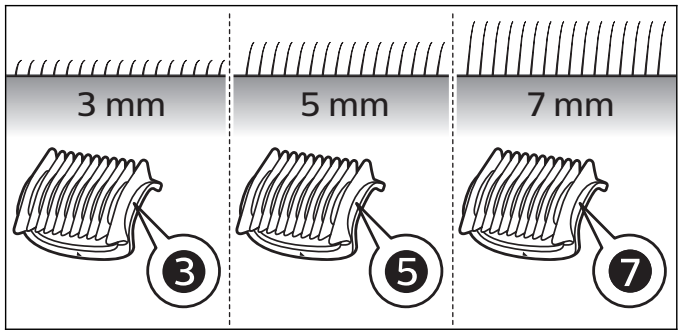
3 mm
5 mm
7 mm
3
5
7

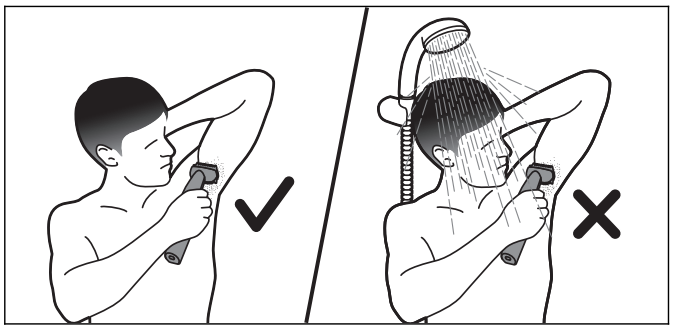

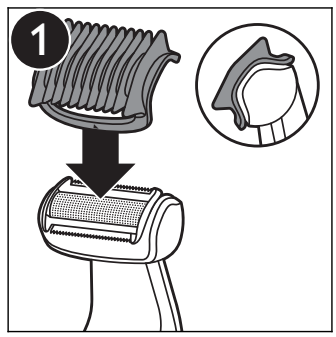
1

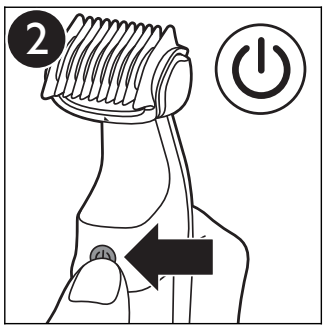
2

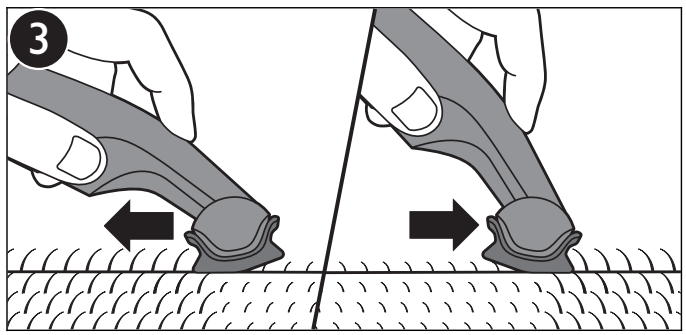
3

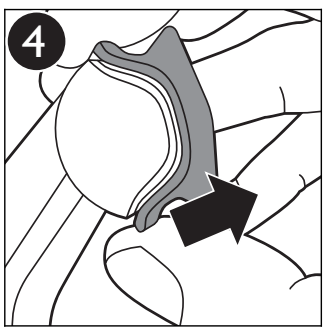
4

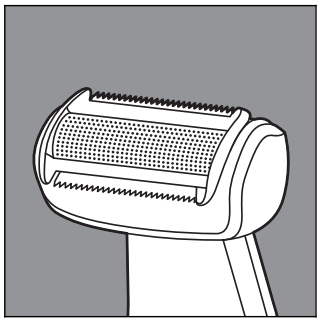

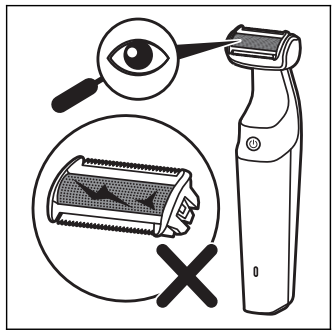

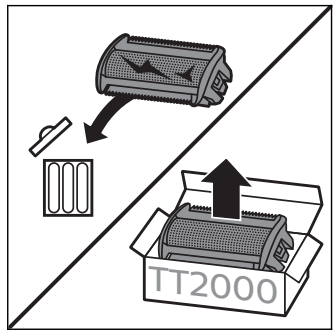
TT2000

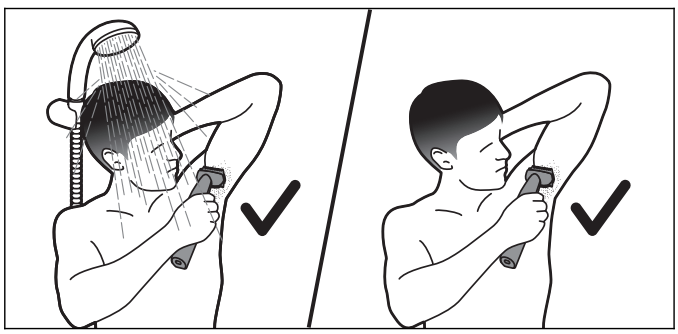

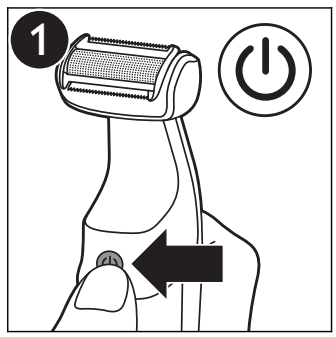
1

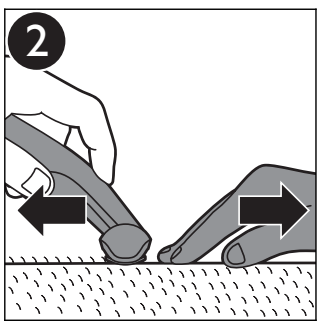
2

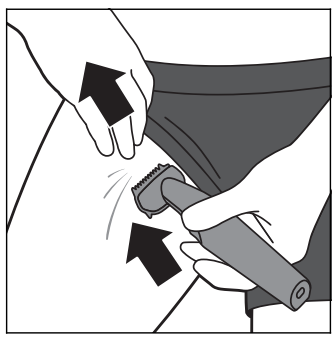

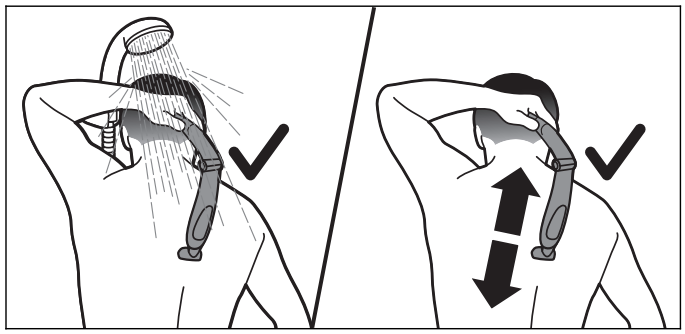

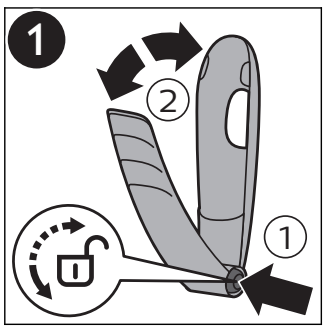
1
2
1

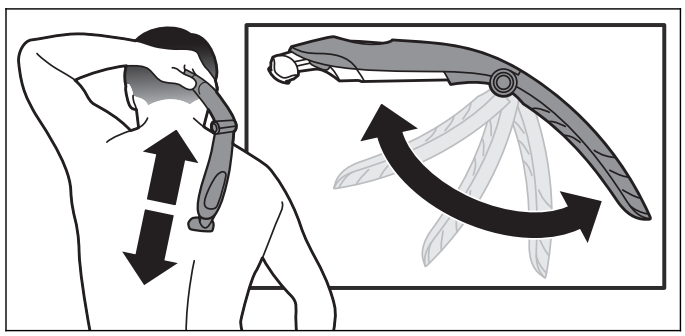

2

3

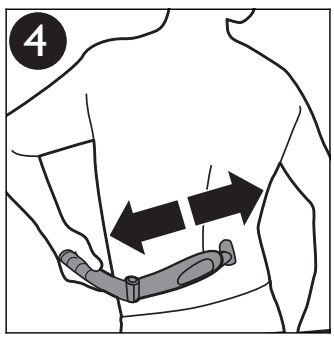
4

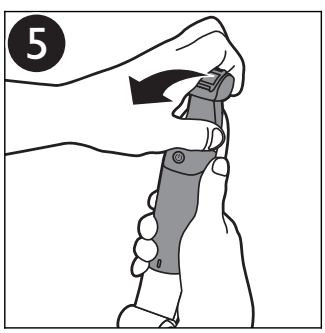
5

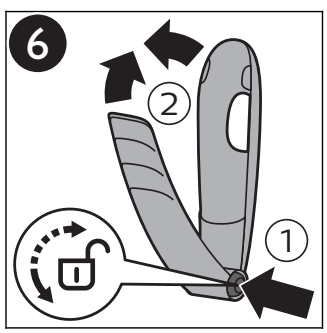
6
2
1

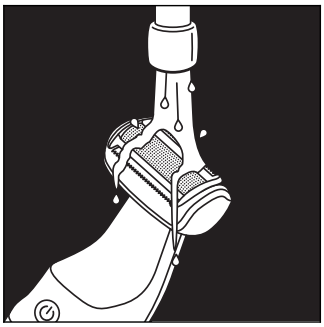

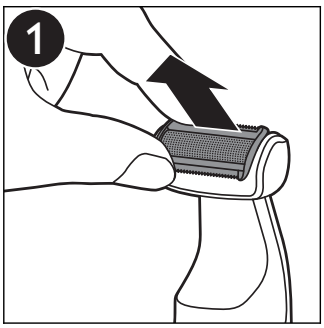
1

2

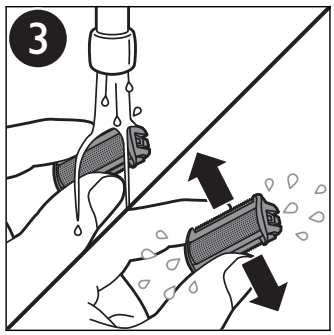
3

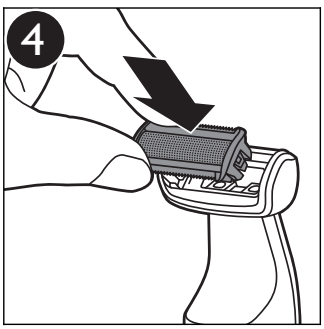
4

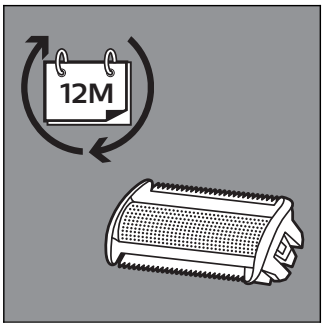
12M

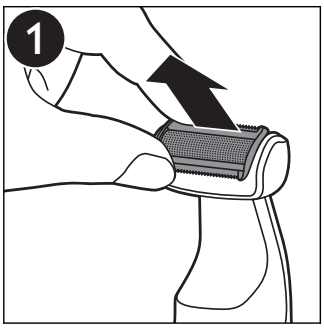
1

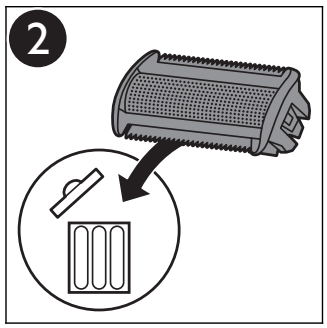
2

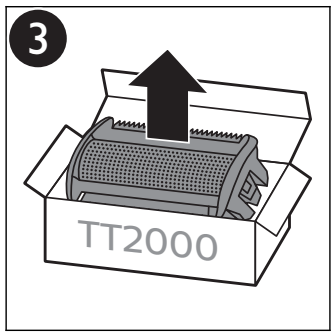
3
TT2000

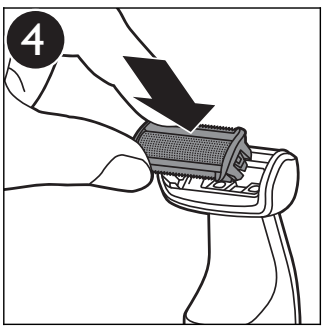
4

© 2017 Koninklijke Philips N.V.
All rights reserved
4222.002.8918.2 (14/12/2017)
>75% recycled paper
>75% papier recyclé